FLANGE ADAPTERS

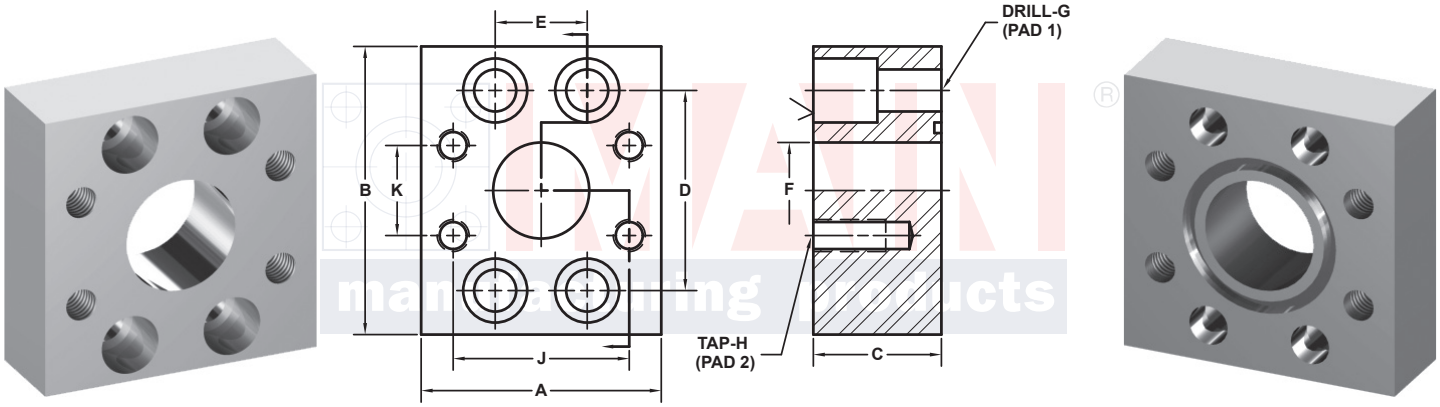

3181 TRI-PARK DR. GRAND BLANC, MI 48439 800-521-7918 810-953-1380 FAX 810-953-1385 INFO@MAINMFG.COM

SAE BOLT PATTERN										62 SERIES TO 61 SERIES⑤					
PAD 1 C62	PAD 2 C61	PART NUMBER	A	B	C	D	E	F	G	H	J	K	MOUNTING KIT①		
													PART NO.	BOLT SIZE	O-RING
1/2	1/2	6339-08-08B	2.25	2.25	1.00	1.594	.718	.50	.34	5/16-18	1.500	.688	MK 564	5/16-18 x 1	210
3/4	3/4	6339-12-12B	2.75	2.81	1.00	2.000	.937	.75	.41	3/8-16	1.875	.875	MK 565	3/8-16 x 1	214
3/4	1/2	6339-12-08B	2.25	2.81	1.75	2.000	.937	.50	.41	5/16-18	1.500	.688	MK 502	3/8-16 x 1 3/4	214
1	1	6339-16-16B	3.00	3.19	1.25	2.250	1.093	1.00	.47	3/8-16	2.062	1.031	MK 569	7/16-14 x 1 1/4	219
1	3/4	6339-16-12B	2.75	3.19	1.75	2.250	1.093	.75	.47	3/8-16	1.875	.875	MK 513	7/16-14 x 1 3/4	219
1	1/2	6339-16-08B	2.25	3.19	1.75	2.250	1.093	.50	.47	5/16-18	1.500	.688	MK 513	7/16-14 x 1 3/4	219
1 1/4	1 1/4	6339-20-20B	3.25	3.75	1.25	2.625	1.250	1.25	.53	7/16-14	2.312	1.188	MK 570	1/2-13 x 1 1/4	222
1 1/4	1	6339-20-16B	2.75	3.75	1.75	2.625	1.250	1.00	.53	3/8-16	2.062	1.031	MK 529	1/2-13 x 1 3/4	222
1 1/4	3/4	6339-20-12B	2.75	3.75	1.75	2.625	1.250	.75	.53	3/8-16	1.875	.875	MK 529	1/2-13 x 1 3/4	222
1 1/4	1/2	6339-20-08B	2.75	3.75	1.75	2.625	1.250	.50	.53	5/16-18	1.500	.688	MK 529	1/2-13 x 1 3/4	222
1 1/2	1 1/2	6339-24-24B	3.75	4.50	1.50	3.125	1.437	1.50	.66	1/2-13	2.750	1.406	MK 571	5/8-11 x 1 1/2	225
1 1/2	1 1/4	6339-24-20B	3.25	4.50	2.00	3.125	1.437	1.25	.66	7/16-14	2.312	1.188	MK 562	5/8-11 x 2	225
1 1/2	1	6339-24-16B	3.25	4.50	1.75	3.125	1.437	1.00	.66	3/8-16	2.062	1.031	MK 1544	5/8-11 x 1 3/4	225
1 1/2	3/4	6339-24-12B	3.25	4.50	1.75	3.125	1.437	.75	.66	3/8-16	1.875	.875	MK 1544	5/8-11 x 1 3/4	225
1 1/2	1/2	6339-24-08B	3.25	4.50	1.75	3.125	1.437	.50	.66	5/16-18	1.500	.688	MK 1544	5/8-11 x 1 3/4	225

① Order Separately

⑤ **CAUTION:** Flange adapter pressure rating cannot exceed 61 series pad connection.

© Copyright MAIN Mfg. 2017

FLANGE ADAPTERS

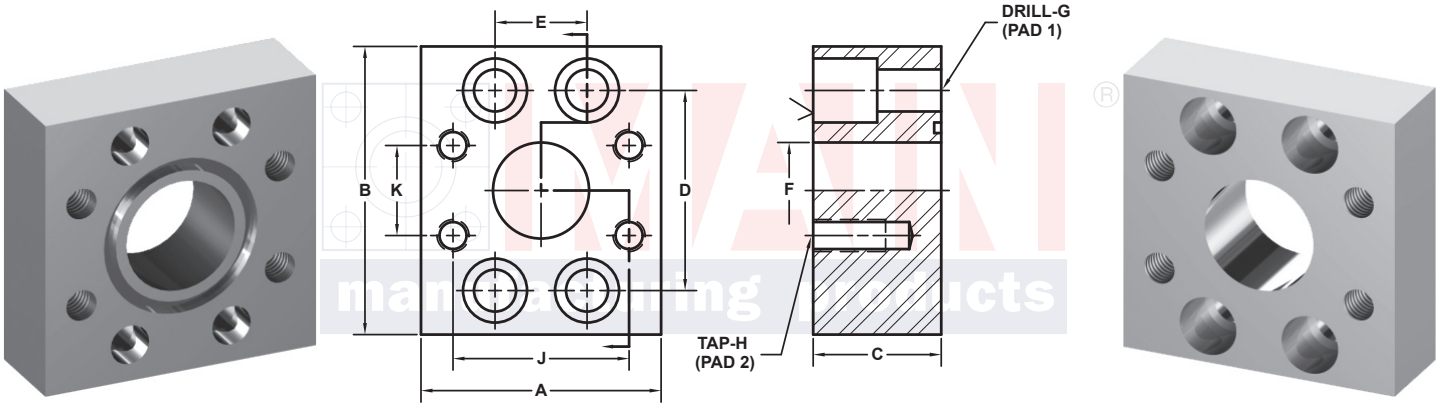

3181 TRI-PARK DR. GRAND BLANC, MI 48439 800-521-7918 810-953-1380 FAX 810-953-1385 INFO@MAINMFG.COM

SAE BOLT PATTERN												62 SERIES TO 61 SERIES⑤			
PAD 1 C62	PAD 2 C61	PART NUMBER	A	B	C	D	E	F	G	H	J	K	MOUNTING KIT①		
													PART NO.	BOLT SIZE	O-RING
2	2	6339-32-32B	4.00	5.25	1.75	3.812	1.750	1.94	.78	1/2-13	3.062	1.688	MK 563	3/4-10 x 2	228
2	1½	6339-32-24B	4.00	5.25	2.00	3.812	1.750	1.50	.78	1/2-13	2.750	1.406	MK 1574	3/4-10 x 2 1/4	228
2	1¼	6339-32-20B	4.00	5.25	2.00	3.812	1.750	1.25	.78	7/16-14	2.312	1.188	MK 1574	3/4-10 x 2 1/4	228
2	1	6339-32-16B	4.00	5.25	1.75	3.812	1.750	1.00	.78	3/8-16	2.062	1.031	MK 563	3/4-10 x 2	228
2	¾	6339-32-12B	4.00	5.25	1.75	3.812	1.750	.75	.78	3/8-16	1.875	.875	MK 563	3/4-10 x 2	228
2	½	6339-32-08B	4.00	5.25	1.75	3.812	1.750	.50	.78	5/16-18	1.500	.688	MK 563	3/4-10 x 2	228
2½④	2½②	6339-40-40B	5.00	6.88	2.00	4.875	2.312	2.44	.94	1/2-13	3.500	2.000	MK 1513	7/8-9 x 2 1/4	232
2½④	2	6339-40-32B	5.00	6.88	2.00	4.875	2.312	1.94	.94	1/2-13	3.062	1.688	MK 1513	7/8-9 x 2 1/4	232
2½④	1½	6339-40-24B	5.00	6.88	2.00	4.875	2.312	1.50	.94	1/2-13	2.750	1.406	MK 1513	7/8-9 x 2 1/4	232
2½④	1¼	6339-40-20B	5.00	6.88	2.00	4.875	2.312	1.25	.94	7/16-14	2.312	1.188	MK 1513	7/8-9 x 2 1/4	232
2½④	1	6339-40-16B	5.00	6.88	2.00	4.875	2.312	1.00	.94	3/8-16	2.062	1.031	MK 1513	7/8-9 x 2 1/4	232
2½④	¾	6339-40-12B	5.00	6.88	2.00	4.875	2.312	.75	.94	3/8-16	1.875	.875	MK 1513	7/8-9 x 2 1/4	232
2½④	½	6339-40-08B	5.00	6.88	2.00	4.875	2.312	.50	.94	5/16-18	1.500	.688	MK 1513	7/8-9 x 2 1/4	232
3④	3③	6339-48-48B	6.00	8.50	2.50	6.000	2.812	2.94	1.19	5/8-11	4.188	2.438	MK 1514	1 1/8-7 x 2 1/2	237
3④	2½②	6339-48-40B	6.00	8.50	2.50	6.000	2.812	2.44	1.19	1/2-13	3.500	2.000	MK 718	1 1/8-7 x 4 1/2	237
3④	2	6339-48-32B	6.00	8.50	2.50	6.000	2.812	1.94	1.19	1/2-13	3.062	1.688	MK 718	1 1/8-7 x 4 1/2	237
3④	1½	6339-48-24B	6.00	8.50	2.50	6.000	2.812	1.50	1.19	1/2-13	2.750	1.406	MK 718	1 1/8-7 x 4 1/2	237
3④	1¼	6339-48-20B	6.00	8.50	2.50	6.000	2.812	1.25	1.19	7/16-14	2.312	1.188	MK 718	1 1/8-7 x 4 1/2	237
3④	1	6339-48-16B	6.00	8.50	2.50	6.000	2.812	1.00	1.19	3/8-16	2.062	1.031	MK 718	1 1/8-7 x 4 1/2	237

① Order Separately ② 2500 PSI Max ③ 2000 PSI Max ④ Not included in SAE J518 specifications

⑤ **CAUTION:** Flange adapter pressure rating cannot exceed 61 series pad connection.

© Copyright MAIN Mfg. 2017

FLANGE ADAPTERS

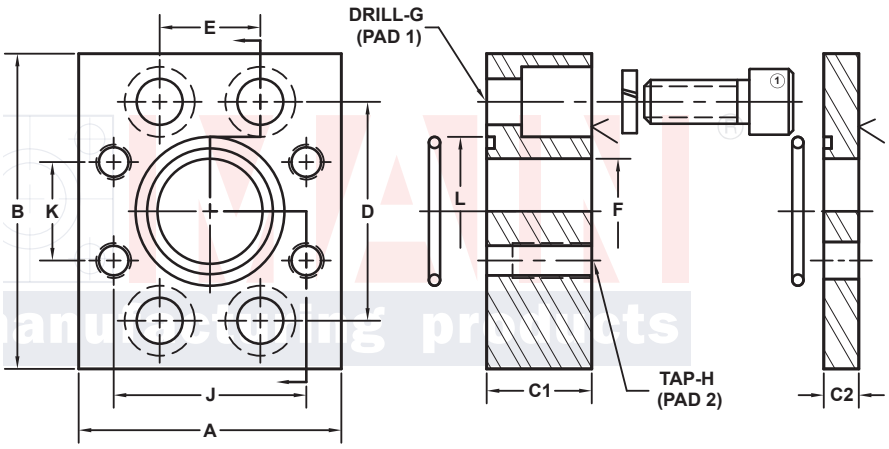

3181 TRI-PARK DR. GRAND BLANC, MI 48439 800-521-7918 810-953-1380 FAX 810-953-1385 INFO@MAINMFG.COM

SAE BOLT PATTERN								62 SERIES TO 61 SERIES⑤								
PAD 1 C62	PAD 2 C61	PART NUMBER	A	B	C1	C2	D	E	F	G	H	J	K	L	MOUNTING KIT① BOLT SIZE	MOUNTING KIT① O-RINGS
¾	1	6339-12-16B	2.81	3.00	1.00	.38	2.000	.937	.75	.41	3/8-16	2.062	1.031	1.250	3/8-16 x 1	214
1	1¼	6339-16-20B	3.25	3.25	1.25	.38	2.250	1.093	1.00	.47	7/16-14	2.312	1.188	1.562	7/16-14 x 1 1/4	219
1	1½	6339-16-24B	3.75	3.25	1.25	.38	2.250	1.093	1.00	.47	1/2-13	2.750	1.406	1.562	7/16-14 x 1 1/4	219
1¼	1½	6339-20-24B	3.75	3.75	1.25	.38	2.625	1.250	1.25	.53	1/2-13	2.750	1.406	1.750	1/2-13 x 1 1/4	222
1¼	2	6339-20-32B	4.00	3.75	1.25	.38	2.625	1.250	1.25	.53	1/2-13	3.062	1.688	1.750	1/2-13 x 1 1/4	222
1½	2	6339-24-32B	4.00	4.50	1.50	.50	3.125	1.437	1.50	.66	1/2-13	3.062	1.688	2.125	5/8-11 x 1 1/2	225
2	2½②	6339-32-40B	4.50	5.25	1.75	.50	3.812	1.750	1.94	.78	1/2-13	3.500	2.000	2.500	3/4-10 x 2	228

① Included: (4) Bolts, (4) Lock Washers, (2) O-Rings ② 2500 PSI Max

⑤ **CAUTION:** Flange adapter pressure rating cannot exceed 61 series pad connection.

© Copyright MAIN Mfg. 2017